EVAPCO, INC.

UNIT	MODEL #	SCALE	DWG. #	REV.	DATE	SERIAL #
CLOSED CIRCUIT COOLER	ESWB 12-43L12-Z		WXB12124806-DRA-SLSF		04/30/2015	15-757596

NOTES:
1. (M)- FAN MOTOR LOCATION
2. HEAVIEST SECTION IS COIL SECTION
3. MPT DENOTES MALE PIPE THREAD
   FPT DENOTES FEMALE PIPE THREAD
   BFW DENOTES BEVELED FOR WELDING
4. +UNIT WEIGHT DOES NOT INCLUDE ACCESSORIES (SEE ACCESSORY DRAWINGS)
5. 3/4" [19MM] DIA. MOUNTING HOLES. REFER TO RECOMMENDED STEEL SUPPORT DRAWING
6. MAKE-UP WATER PRESSURE
   20 psi [137 kPa] MIN,
   50 psi [344 kPa] MAX
7. DIMENSIONS LISTED AS FOLLOWS:
   ENGLISH IN
   [METRIC] [mm]
8. * - APPROXIMATE DIMENSIONS DO NOT USE FOR PRE-FABRICATION OF CONNECTING PIPING.
9. SERIES FLOW PIPING AND AUX. CROSSOVER DRAIN BY OTHERS

FACE 2
PLAN VIEW

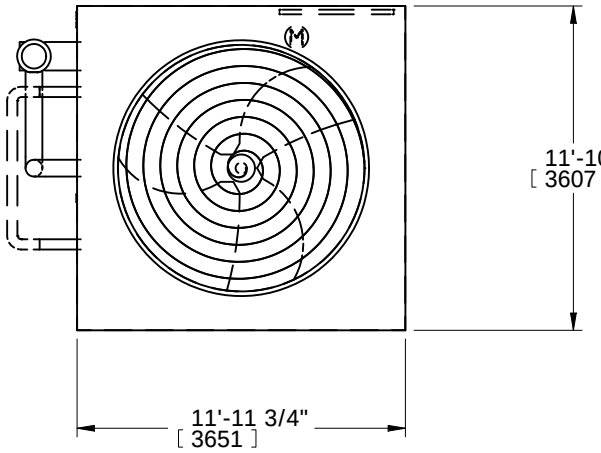

FACE 1

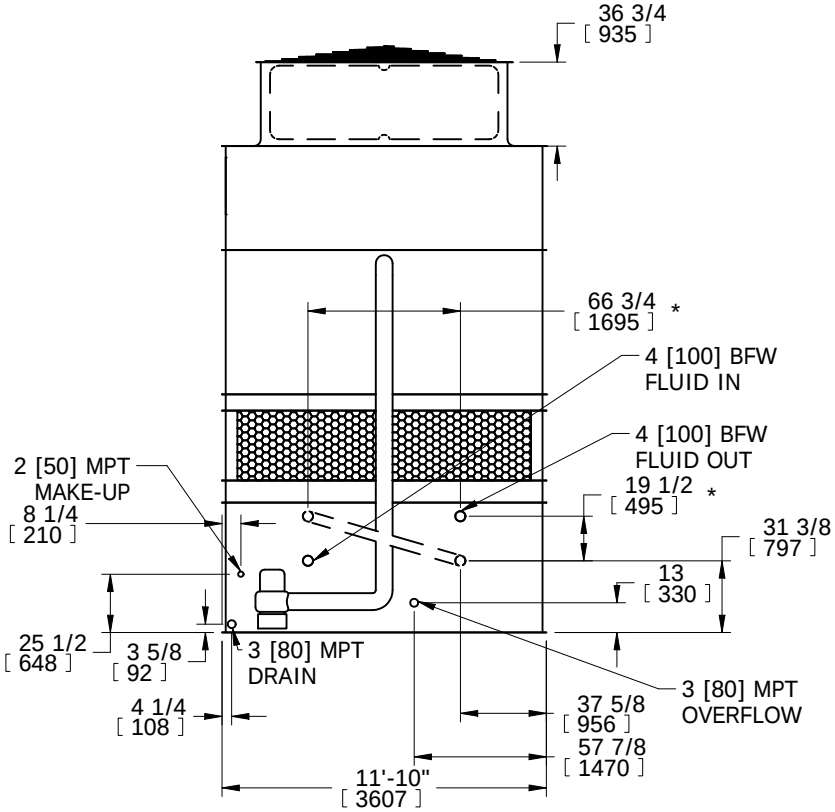

FACE 2

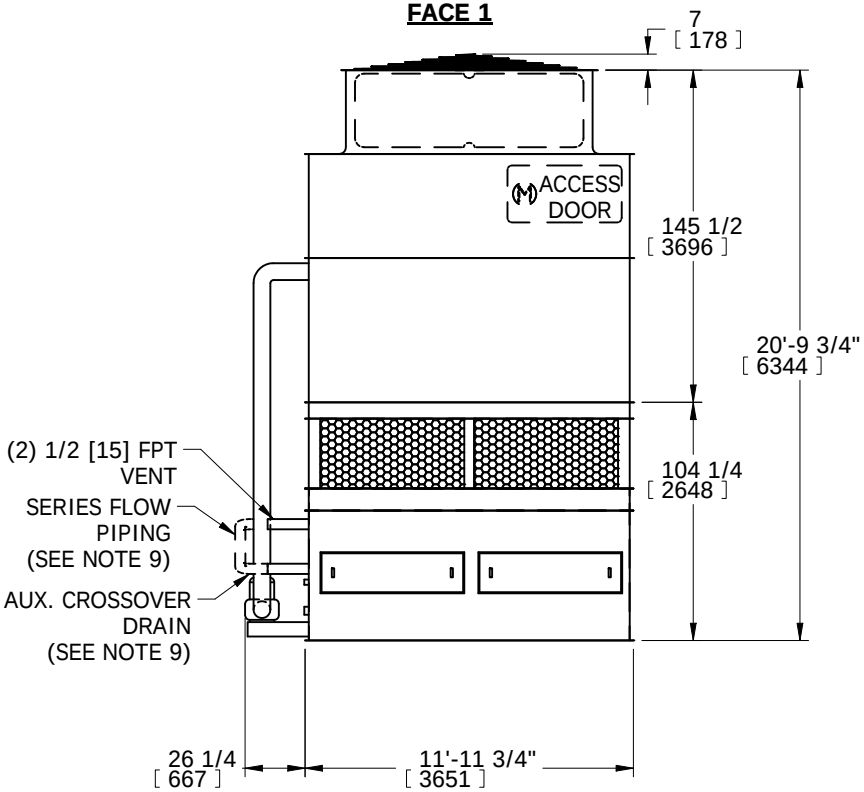

FACE 1

SHIPPING WEIGHT	OPERATING WEIGHT	HEAVIEST SECTION WEIGHT	NO. OF SHIPPING SECTIONS	DRAWN BY:
20120 lbs+ [9126] kg+	31540 lbs+ [14307] kg+	13970 lbs+ [6337] kg+	2	SLR

EVAPCO, INC.

UNIT	MODEL #	SCALE	DWG. #	REV.	DATE	SERIAL #
CLOSED CIRCUIT COOLER	ESWB 12-43L12-Z	NTS	WXB12124806-DRA-001	1	05/03/15	15-757596

NOTES:
1. (M)- FAN MOTOR LOCATION
2. HEAVIEST SECTION IS COIL SECTION
3. MPT DENOTES MALE PIPE THREAD
   FPT DENOTES FEMALE PIPE THREAD
   BFW DENOTES BEVELED FOR WELDING
4. +UNIT WEIGHT DOES NOT INCLUDE ACCESSORIES (SEE ACCESSORY DRAWINGS)
5. 3/4" [19MM] DIA. MOUNTING HOLES. REFER TO RECOMMENDED STEEL SUPPORT DRAWING
6. MAKE-UP WATER PRESSURE
   20 psi [137 kPa] MIN,
   50 psi [344 kPa] MAX
7. DIMENSIONS LISTED AS FOLLOWS:
   ENGLISH IN
   [METRIC] [mm]
8. * - APPROXIMATE DIMENSIONS DO NOT USE FOR PRE-FABRICATION OF CONNECTING PIPING.
9. SERIES FLOW PIPING AND AUX. CROSSOVER DRAIN BY OTHERS

PLAN VIEW

FACE 2

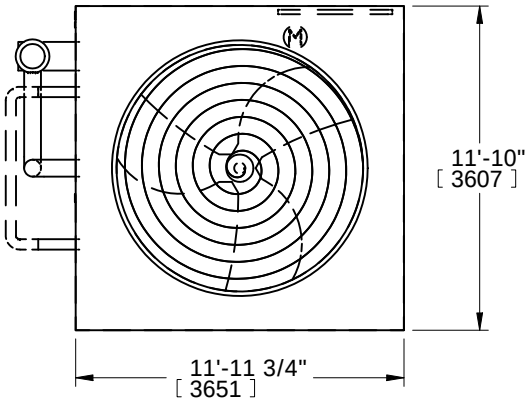

FACE 1

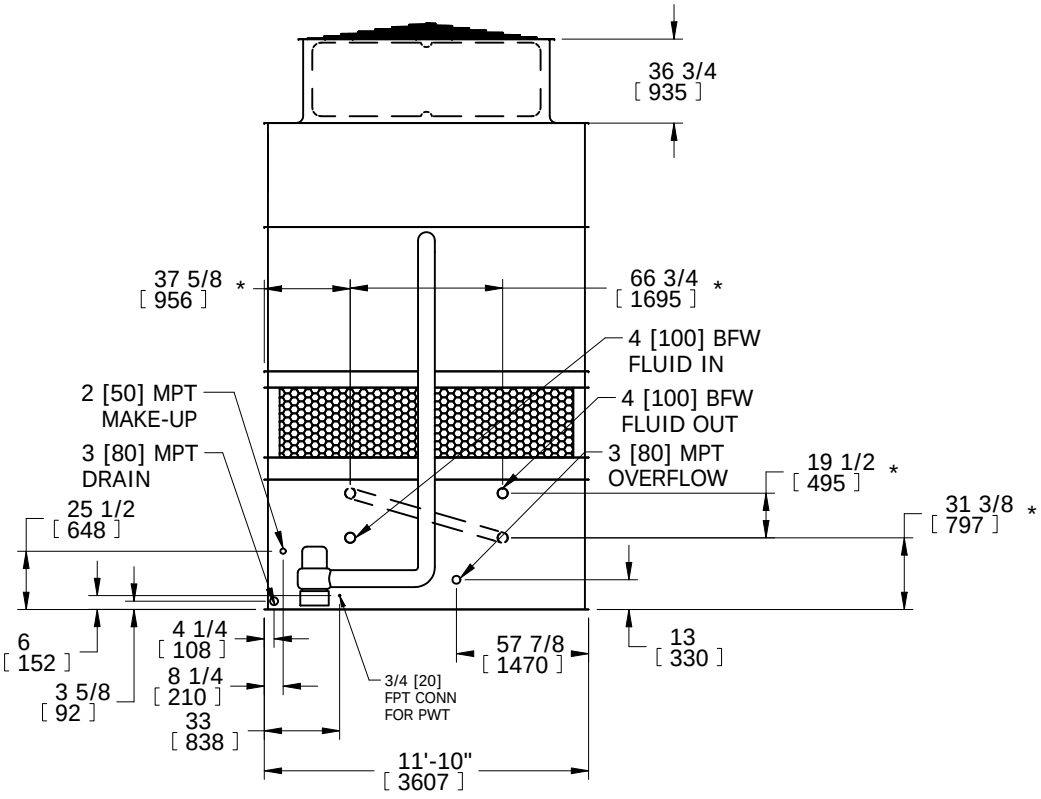

FACE 2

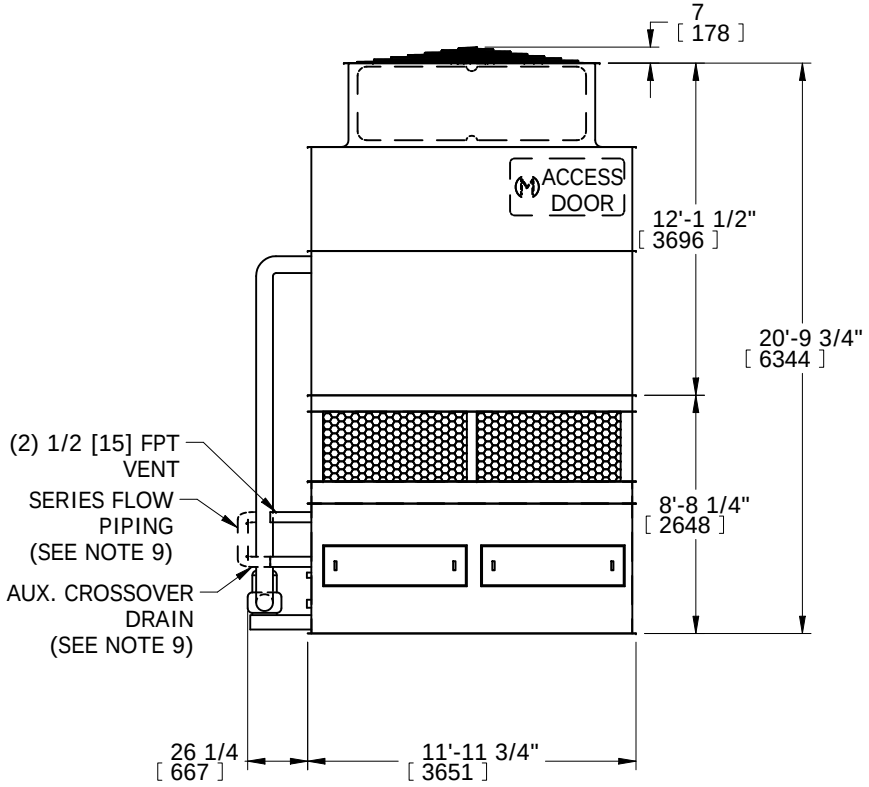

FACE 1

SHIPPING WEIGHT	OPERATING WEIGHT	HEAVIEST SECTION WEIGHT	NO. OF SHIPPING SECTIONS	DRAWN BY:
20120 lbs+ [9126] kg+	31540 lbs+ [14306] kg+	13970 lbs+ [6337] kg+	2	